Valrom Industrie SRL
J1996004810406; RO8529679
28 Preciziei Blvd., 6th District
062204 Bucharest, Romania
office@valrom.ro
www.valrom.ro

DATA SHEET
PE100 CERT VALWater PIPES for DRINKING WATER

1. Field of use

➢ High density polyethylene HDPE <VALWater> PE100CERT pipes are used in the construction of drinking water pipe networks and are mounted underground, by the conventional method, in an open trench with embedment in sand.

2. Technical features and dimensions

➢ **Appearance and colour**

When examined visually (without magnification tools), the surfaces must be smooth, clean, without burrs, pores and other surface defects that may affect pipes performances. The ends must be cut neatly and perpendicularly on the pipe axis.

The pipes are black with blue stripes, longitudinally coextruded. The identification raw material is based on the same polyethylene granules as the basic composition.

➢ **Raw material**

The raw material is represented by the high density polyethylene granules, made of a homogeneous mixture of polyethylene, antioxidants, pigments and UV stabilizers.

The features of the basic and identification raw material used in the manufacturing process meets the requirements of SR ISO 4427-1 and SR EN 12201-1.

PE100 raw material features

Feature	Unit	Test method	Reference value
Density (23°)	g/cm^3	EN ISO 1183	min. 0.945
MFR (Melt flow rate) index		EN ISO 1133 5 kgf/190°C	0.2.....1.4 g/10 min
Carbon black content	%	SR ISO 6964, ASTM D 1603	2%....2.5%
Carbon black dispersion	degree	ISO 18553	≤ 3
Volatile material content	mg/kg	SR EN 12099	≤350
Oxidation induction time (OIT)	min	ISO 10837, ISO 11357-6, EN 728	≥20
Minimum required strength (MRS) for PE100	MPa	SR EN ISO 9080	10

Valrom Industrie SRL
J1996004810406; RO8529679
28 Preciziei Blvd., 6th District
062204 Bucharest, Romania
office@valrom.ro
www.valrom.ro

Features of PE100CERT pipes

Feature	Unit	Test method	Reference value
Appearance	-	SR EN12201-2, SR ISO4427-2	inspected without magnification tools, the inner and outer surfaces of tubes are smooth, clean and without burrs, pores and other surface defects
Sizes and tolerances	mm	SR EN 12201-2, SR ISO 4427-2, SR ISO 11922	sizes and tolerances (outer diameter, thickness, ovality) meet the values provided in the standard
PE100CERT hydrostatic resistance	h	EN ISO 1167-1, EN ISO 1167-2	≥ 100 hours at 20°C, 12.0 MPa ≥ 165 hours at 80°C, 5.4 MPa ≥ 1000 hours at 80°C, 5.0 MPa
MFR (Melt flow rate) index		EN ISO 1133 5 kgf/190C	0.2.....1.4 g/10 min after processing, a deviation of ±20% of the value corresponding to the raw material used to manufacture the pipe is allowed
Breaking elongation	%	SR EN ISO 6259-1, ISO 6259-3	≥450%
Thermal longitudinal contraction	%	SR EN ISO 2505	≤3 %

➢ Pipe marking

Pipe marking is performed on the entire length, with the information repeated every 1 m of pipe.
The marking is performed according to EN12201 standard.
Pipe marking:

- Manufacturer's name: VALROM
- Brand: VALWater
- Made in Romania
- D ext. x e (outer diameter x wall thickness)
- Batch: made of 4 digits, the first 2 digits represent the last two digits of the manufacturing year, and the following 2 digits represent the batch reference number, BATCH 2602
- DRINKING WATER
- Nominal pressure: PN
- Pipe SDR (Standard Dimension Ratio): SDR
- Reference standard: EN 12201
- Material: PE 100
- Date: day month year: 02.02.2026
- Meters

Valrom Industrie SRL
J1996004810406; RO8529679
28 Preciziei Blvd., 6th District
062204 Bucharest, Romania
office@valrom.ro
www.valrom.ro

- **Conditions of use**

Operating pressure (PN) calculated according to EN 12201, for an application temperature of 20°C, design stress PE100 σ=8.0 MPa.

- Definition of material and design stress

Designation	Minimum required strength (MRS) MPa	Design stress σ((HDS) MPa
PE 100	10,0	8,0

where:
MRS (Minimum Required Strength) is the minimum required strength extracted according to EN12201:1 from regression curves at 20ºC, in MPa
σ = Hydrostatic Design Stress at 20ºC for specified use, in MPa
C= Design Coefficient, according to EN 12201 C=1.25.

$$\sigma s = \frac{MRS}{C} \qquad PN = \frac{20\sigma s}{SDR - 1}$$

Operating pressure PN variation is inversely proportional to the water temperature. The maximum pressure value corresponds to temperatures lower or equal to 20°C.

According to SR EN 12201:

Temperature°C	Pressure reduction coefficient
≤ 20°	1.00
30°	0.85
40°	0.73

- **<u>Dimensions</u>**
- The minimum allowed wall thickness tolerance in any point corresponding to the rated wall thickness complies with ISO 4427, EN12201, DIN 8074, DIN 8075.
- The manufacturing rated wall thickness of the pipe complies with ISO 4427, EN12201, DIN 8074, DIN 8075, STF and corresponds to the calculated nominal pressures and design stresses.
- The ovality (out of roundness) is determined after extrusion and complies with ISO 11922-1, N degree for pipes with diameter ≤630mm. Ovality is calculated as the difference between the measured maximum outer diameter and the minimum outer diameter measured on the same pipe cross section
- In general, pipes with SDR<21 up to 125 mm in diameter are delivered in coils and pipes with diameters greater than or equal to 125 mm are delivered in 13 meters bars.
- Pipes having SDR 21 are delivered in coils, for diameters up to and including 75 mm, and in 13 meters bars for diameters above 75 mm.
- Pipes with SDR>21 are delivered in 13 meters bars.

Valrom Industrie SRL
J1996004810406; RO8529679
28 Preciziei Blvd., 6th District
062204 Bucharest, Romania
office@valrom.ro
www.valrom.ro

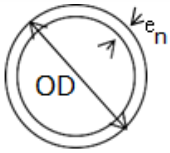

PE 100 CERT <VALWater> PIPES
SIZES - NOMINAL PRESSURES – WEIGHTS

PE100 SDR26 PN6(c=1,25, water 20°C)

Cod		OD [mm]	e [mm]	Weight [kg/m]	Length [m]	Quantity per package
24060750013	*	75	2,9	0,656	13	104
24060750012	*	75	2,9	0,656	12	104
24060900013	*	90	3,5	0,946	13	63
24061100013	*	110	4,2	1,388	13	48
24061100012	*	110	4,2	1,388	12	48
24061250013	*	125	4,8	1,801	13	26
24061250012	*	125	4,8	1,801	12	26
24061400013	*	140	5,4	2,269	13	23
24061600013	F0	160	6,2	2,977	13	20
24061600012	*	160	6,2	2,977	12	20
24061600006	*	160	6,2	2,977	6	20
24061800013	*	180	6,9	3,729	13	17
24062000013	F1	200	7,7	4,623	13	17
24062250013	*	225	8,6	5,810	13	14
24062500013	*	250	9,6	7,204	13	9
24062500012	*	250	9,6	7,204	12	9
24062800013	*	280	10,7	8,995	13	8
24063150013	*	315	12,1	11,441	13	7
24063150006	*	315	12,1	11,441	6	7
24063550013	*	355	13,6	14,495	13	4
24064000013	*	400	15,3	18,374	13	4
24064000006		400	15,3	18,374	6	4
24064500013	*	450	17,2	23,238	13	2
24065000013	*	500	19,1	28,673	13	2
24065000012	*	500	19,1	28,673	12	2
24065600013	*	560	21,4	35,980	13	2
24066300013	*	630	24,1	45,583	13	2
24066300012	*	630	24,1	45,583	12	2
24267100013	*	710	27,2	57,973	13	2
24268000013	*	800	30,6	73,492	13	1
24268000006	*	800	30,6	73,492	6	1
24269000013	*	900	34,4	92,948	13	1
24269100013	*	1000	38,2	114,687	13	1
24269120013	*	1200	45,9	165,356	13	1

**on request*

Valrom Industrie SRL
J1996004810406; RO8529679
28 Preciziei Blvd., 6th District
062204 Bucharest, Romania
office@valrom.ro
www.valrom.ro

PE100 SDR21 PN8 (c=1,25, water 20°C)

Cod		OD [mm]	e [mm]	Weight [kg/m]	Length [m]	Quantity per package
24080500100	F0	50	2,4	0,357	100	1
24080630100	F0	63	3,0	0,562	100	1
24080750100	F0	75	3,6	0,803	100	1
24080750013	*	75	3,6	0,803	13	104
24080900100	*	90	4,3	1,151	100	1
24080900013	*	90	4,3	1,151	13	63
24081100100	*	110	5,3	1,733	100	1
24081100080	*	110	5,3	1,733	80	1
24081100013	*	110	5,3	1,733	13	48
24081250013	*	125	6,0	2,229	13	26
24081400013	*	140	6,7	2,788	13	23
24081600013	*	160	7,7	3,661	13	20
24081800013	*	180	8,6	4,602	13	17
24082000013	*	200	9,6	5,706	13	17
24082000012	*	200	9,6	5,706	12	17
24082250013	*	225	10,8	7,222	13	14
24082500013	*	250	11,9	8,845	13	9
24082800013	*	280	13,4	11,160	13	8
24082800012	*	280	13,4	11,160	12	8
24083150013	*	315	15,0	14,048	13	7
24083550013	*	355	16,9	17,837	13	4
24084000013	*	400	19,1	22,711	13	4
24084500013	*	450	21,5	28,759	13	2
24085000013	*	500	23,9	35,520	13	2
24085600013	*	560	26,7	44,450	13	2
24086300013	*	630	30,0	56,189	13	2
24217100013	*	710	33,9	71,544	13	2
24218000013	*	800	38,1	90,612	13	1
24219000013	*	900	42,9	114,777	13	1
24219100013	*	1000	47,7	141,793	13	1
24219120013	*	1200	57,2	204,047	13	1

**on request*

PE100 SDR17 PN10 (c=1,25, water 20°C)

Cod		OD [mm]	e [mm]	Weight [kg/m]	Length [m]	Quantity per package
24100320200	F0	32	2,0	0,188	200	7
24100320150	*	32	2,0	0,188	150	1
24100320100	F0	32	2,0	0,188	100	8

Valrom Industrie SRL
J1996004810406; RO8529679
28 Preciziei Blvd., 6th District
062204 Bucharest, Romania
office@valrom.ro
www.valrom.ro

Cod		OD [mm]	e [mm]	Weight [kg/m]	Length [m]	Quantity per package
24100320120	*	32	2,0	0,188	120	1
24100400150	*	40	2,4	0,282	150	1
24100400120	*	40	2,4	0,282	120	1
24100400100	F0	40	2,4	0,282	100	9
24100500100	F0	50	3,0	0,441	100	8
24100630100	F0	63	3,8	0,703	100	1
24100630006	*	63	3,8	0,703	6	
24100750100	F0	75	4,5	0,991	100	1
24100750050	*	75	4,5	0,991	50	1
24100750013	*	75	4,5	0,991	13	104
24100750006	*	75	4,5	0,991	6	104
24100900100	F0	90	5,4	1,427	100	1
24100900050	*	90	5,4	1,427	50	1
24100900013	*	90	5,4	1,427	13	63
24100900006	F1	90	5,4	1,427	6	63
24101100100	F0	110	6,6	2,131	100	1
24101100080	*	110	6,6	2,131	80	1
24101100050	*	110	6,6	2,131	50	1
24101100013	F0	110	6,6	2,131	13	48
24101100012	*	110	6,6	2,131	12	48
24101100006	F0	110	6,6	2,131	6	48
24101250100	F0	125	7,4	2,717	100	1
24101250013	F0	125	7,4	2,717	13	26
24101250012	*	125	7,4	2,717	12	26
24101250006	F0	125	7,4	2,717	6	26
24101400013	F0	140	8,3	3,413	13	23
24101400006	*	140	8,3	3,413	6	23
24101600013	F0	160	9,5	4,463	13	20
24101600012	*	160	9,5	4,463	12	20
24101600006	F0	160	9,5	4,463	6	20
24101800013	F0	180	10,7	5,655	13	17
24101800006	*	180	10,7	5,655	6	17
24102000013	F0	200	11,9	6,988	13	17
24102000006	*	200	11,9	6,988	6	17
24102250013	F0	225	13,4	8,860	13	14
24102250012	*	225	13,4	8,860	12	14
24102250006	*	225	13,4	8,860	6	14
24102500013	F0	250	14,8	10,866	13	9
24102500006	*	250	14,8	10,866	6	9
24102800013	F1	280	16,6	13,650	13	8
24102800012	*	280	16,6	13,650	12	8
24102800006	*	280	16,6	13,650	6	8

Valrom Industrie SRL
J1996004810406; RO8529679
28 Preciziei Blvd., 6th District
062204 Bucharest, Romania
office@valrom.ro
www.valrom.ro

Cod		OD [mm]	e [mm]	Weight [kg/m]	Length [m]	Quantity per package
24103150013	F0	315	18,7	17,297	13	7
24103150012	*	315	18,7	17,297	12	7
24103150006	*	315	18,7	17,297	6	7
24103550013	*	355	21,1	21,993	13	4
24103550012	*	355	21,1	21,993	12	4
24103550006	*	355	21,1	21,993	6	4
24104000013	F0	400	23,7	27,840	13	4
24104000006	*	400	23,7	27,840	6	4
24104500013	*	450	26,7	35,282	13	2
24104500012	*	450	26,7	35,282	12	2
24104500006	*	450	26,7	35,282	6	2
24105000013	*	500	29,7	43,603	13	2
24105000012	*	500	29,7	43,603	12	2
24105000006	*	500	29,7	43,603	6	2
24105600013	*	560	33,2	54,597	13	2
24105600012	*	560	33,2	54,597	12	2
24105600006	*	560	33,2	54,597	6	2
24106300013	*	630	37,4	69,185	13	2
24106300012	*	630	37,4	69,185	12	2
24106300006	*	630	37,4	69,185	6	2
24177100013	*	710	42,1	87,773	13	2
24177100012	*	710	42,1	87,773	12	2
24177100006	*	710	42,1	87,773	6	2
24178000013	*	800	47,4	111,354	13	1
24178000012	*	800	47,4	111,354	12	1
24178000006	*	800	47,4	111,354	6	1
24179000013	*	900	53,3	140,871	13	1
24179000012	*	900	53,3	140,871	12	1
24179000006	*	900	53,3	140,871	6	1
24179100013	*	1000	59,3	174,128	13	1
24179100012	*	1000	59,3	174,128	12	1
24179100006	*	1000	59,3	174,128	6	1
24179120013	*	1200	71,1	250,547	13	1
24179120012	*	1200	71,1	250,547	12	1
24179120006	*	1200	71,1	250,547	6	1

**on request*

PE100 SDR13,6 PN12,5 (c=1,25, water 20°C)

Cod		OD [mm]	e [mm]	Weight [kg/m]	Length [m]	Quantity per package
24120400200	*	40	3,0	0,347	200	1
24120750100	*	75	5,6	1,214	100	1

Valrom Industrie SRL
J1996004810406; RO8529679
28 Preciziei Blvd., 6th District
062204 Bucharest, Romania
office@valrom.ro
www.valrom.ro

Cod		OD [mm]	e [mm]	Weight [kg/m]	Length [m]	Quantity per package
24120900100	*	90	6,7	1,743	Colac 100m	1
24121100013	*	110	8,1	2,577	13	48
24121250013	*	125	9,2	3,326	13	26
24121400013	*	140	10,3	4,171	13	23
24121600013	*	160	11,8	5,459	13	20
24121800013	*	180	13,3	6,921	13	17
24122000013	*	200	14,7	8,503	13	17
24122250013	*	225	16,6	10,799	13	14
24122500013	*	250	18,4	13,303	13	9
24122800013	*	280	20,6	16,681	13	8
24123150013	*	315	23,2	21,133	13	7
24123150012	*	315	23,2	21,133	12	7
24123550013	*	355	26,1	26,797	13	4
24124000013	*	400	29,4	34,012	13	4
24124500013	*	450	33,1	43,077	13	2
24125000013	*	500	36,8	53,211	13	2
24125600013	*	560	41,2	66,723	13	2
24126300013	*	630	46,3	84,363	13	2
24137100013	*	710	52,2	107,184	13	2
24138000013	*	800	58,8	136,043	13	1
24139000013	*	900	66,1	172,299	13	1
24139100013	*	1000	73,4	212,301	13	1
24139120013	*	1200	88,2	306,097	13	1

**On request*

PE100 SDR11 PN16 (c=1,25, water 20°C)

Cod		OD [mm]	e [mm]	Weight [kg/m]	Length [m]	Quantity per package
24160200200	*	20	2,0	0,113	200	10
24160250200	F0	25	2,3	0,163	200	9
24160250100	*	25	2,3	0,163	100	10
24160320200	F0	32	3,7	0,272	200	7
24160320120	*	32	3,0	0,272	120	1
24160320100	F1	32	3,0	0,272	100	8
24160400200	*	40	3,7	0,420	200	1
24160400100	F0	40	3,7	0,420	100	9
24160500100	F1	50	4,6	0,652	100	8
24160630100	F0	63	5,8	1,036	100	1
24160630006	*	63	5,8	1,036	6	
24160750100	F1	75	6,8	1,448	100	1
24160750006	*	75	6,8	1,448	6	
24160900100	F0	90	8,2	2,094	100	1

Valrom Industrie SRL
J1996004810406; RO8529679
28 Preciziei Blvd., 6th District
062204 Bucharest, Romania
office@valrom.ro
www.valrom.ro

Cod		OD [mm]	e [mm]	Weight [kg/m]	Length [m]	Quantity per package
24160900013	*	90	8,2	2,094	13	63
24160900012	*	90	8,2	2,094	12	63
24160900006	*	90	8,2	2,094	6	63
24161100100	F0	110	10,0	3,122	100	1
24161100013	F0	110	10,0	3,122	13	48
24161100012	*	110	10,0	3,122	12	48
24161100006	*	110	10,0	3,122	6	48
24161250013	F1	125	11,4	4,043	13	26
24161250006	*	125	11,4	4,043	6	26
24161400013	*	140	12,7	5,047	13	23
24161400006	*	140	12,7	5,047	6	23
24161600013	F0	160	14,6	6,627	13	20
24161600012	*	160	14,6	6,627	12	20
24161600006	*	160	14,6	6,627	6	20
24161800013	*	180	16,4	8,376	13	17
24162000013	F0	200	18,2	10,329	13	17
24162000006	*	200	18,2	10,329	6	17
24162250013	*	225	20,5	13,087	13	14
24162500013	F1	250	22,7	16,108	13	9
24162500012	*	250	22,7	16,108	12	9
24162500006	*	250	22,7	16,108	6	9
24162800013	*	280	25,4	20,188	13	8
24163150013	*	315	28,6	25,679	13	7
24163150012	*	315	28,6	25,679	12	7
24163550013	*	355	32,2	32,447	13	4
24164000013	*	400	36,3	41,212	13	4
24164500013	*	450	40,9	52,232	13	2
24165000013	*	500	45,4	64,427	13	2
24165600013	*	560	50,8	80,748	13	2
24166300013	*	630	57,2	102,278	13	2
24166300012	*	630	57,2	102,278	12	2
24166300006	*	630	57,2	102,278	6	2
24117100013	*	710	64,5	129,963	13	2
24117100012	*	710	64,5	129,963	12	2
24117100006	*	710	64,5	129,963	6	2
24118000013	*	800	72,6	164,844	13	1
24118000012	*	800	72,6	164,844	12	1
24118000006	*	800	72,6	164,844	6	1
24119000013	*	900	81,7	208,688	13	1
24119000012	*	900	81,7	208,688	12	1
24119000006	*	900	81,7	208,688	6	1
24119100013	*	1000	90,8	257,697	13	1

Valrom Industrie SRL
J1996004810406; RO8529679
28 Preciziei Blvd., 6th District
062204 Bucharest, Romania
office@valrom.ro
www.valrom.ro

Cod		OD [mm]	e [mm]	Weight [kg/m]	Length [m]	Quantity per package
24119100012	*	1000	90,8	257,697	12	1
24119100006	*	1000	90,8	257,697	6	1

**On request*

PE100 SDR9 PN20 (c=1,25, water 20°C)

Cod		OD [mm]	e [mm]	Weight [kg/m]	Length [m]	Quantity per package
24200400100	*	40	4,5	0,499	100	9
24200500100		50	5,6	0,777	100	1
24200630100	*	63	7,1	1,241	100	1
24200630050	*	63	7,1	1,241	50	1
24200750100	*	75	8,4	1,747	100	1
24200900100	*	90	10,1	2,520	100	1
24200900050	*	90	10,1	2,520	50	1
24200900012	*	90	10,1	2,520	12	63
24201100013	*	110	12,3	3,752	13	48
24201100012	*	110	12,3	3,752	12	48
24201250013	*	125	14,0	4,851	13	26
24201400013	*	140	15,7	6,092	13	23
24201600013	*	160	17,9	7,940	13	20
24201800013	*	180	20,1	10,033	13	17
24202000013	*	200	22,4	12,419	13	17
24202250013	*	225	25,2	15,718	13	14
24202500013	*	250	27,9	19,344	13	9
24202800013	*	280	31,3	24,300	13	8
24203150013	*	315	35,2	30,745	13	5
24203550013	*	355	39,7	39,075	13	4
24204000013	*	400	44,7	49,578	13	4
24205000013	*	500	55,8	77,374	13	2
24205600013	*	560	62,5	97,062	13	2

**On request*

PE100 SDR7,4 PN25 (c=1,25, water 20°C)

Cod		OD[mm]	e [mm]	Weight [kg/m]	Length [m]	Quantity per package
24250400100	*	40	5,5	0,590	100	9
24250500100	*	50	6,9	0,929	100	8
24250630006	*	63	8,6	1,461	6	1
24250750100	*	75	10,3	2,081	100	1
24250750013	*	75	10,3	2,081	13	104
24250750006	*	75	10,3	2,081	6	104
24250900100	*	90	12,3	2,984	100	1
24250900050	*	90	12,3	2,984	50	1

Valrom Industrie SRL
J1996004810406; RO8529679
28 Preciziei Blvd., 6th District
062204 Bucharest, Romania
office@valrom.ro
www.valrom.ro

Cod		OD[mm]	e [mm]	Weight [kg/m]	Length [m]	Quantity per package
24250900013	*	90	12,3	2,984	13	63
24250900006	*	90	12,3	2,984	6	63
24251100100	*	110	15,1	4,474	100	1
24251100013	*	110	15,1	4,474	13	48
24251100012	*	110	15,1	4,474	12	48
24251250013	*	125	17,1	5,760	13	26
24251400013	*	140	19,2	7,240	13	23
24251600013	*	160	21,9	9,441	13	20
24251600012	*	160	21,9	9,441	12	20
24251800013	*	180	24,6	11,933	13	17
24252000013	*	200	27,4	14,764	13	17
24252500013	*	250	34,2	23,039	13	9
24252800013	*	280	38,3	28,898	13	8
24253150013	*	315	43,1	36,582	13	5

**on request*

3. Packing, handling, transport and storage

- **Packing:** The pipes are manufactured in bars of 6,12 or 13 meters length or coils with of 25, 50, 80, 100, 120 or 200 meters length depending on the diameter and demand.
- **Transport:** The pipes will be transported in clean trucks, free of cutting edges and with sufficient useful length so that the pipes do not hang. The pipes must be secured with textile straps against movement during transport, so as to avoid their contact with various parts of the truck that could scratch or cut the pipe. Pipes must not be pushed, rolled, thrown or dragged from the truck.
- **Handling**: Unloading, loading and possible moving to the construction site or to the storage sites must be done with great care by trained personnel, depending on the weight of the pipe, by carrying or with the aid of forklifts, excavators with a balance or cranes. Pipes must not be pushed, rolled or dragged. In the event that the pipes are pulled on the ground, systems with rollers will be used to limit damage to the maximum. If a handling system is used in contact with the pipes, ensure that they are protected to avoid damage. Metal chains in direct contact with the pipes shall not be used during loading and unloading operations. Wide textile straps will be used in direct contact with the pipes.
- Regarding the handling of the pipe in cold weather, it must be taken into account that the pipe becomes more rigid and has less resistance to impact (at temperatures below 4°C).
- Extra care should be taken when handling HDPE pipes and fittings when wet, frozen or covered with snow as there is a risk of slipping.
- If HDPE pipes or fittings have been exposed to direct sunlight, it is recommended to check the temperature to ensure safe handling.
- **Storage:** Access to the storage and handling area should be controlled to protect persons not involved in the storage, loading, unloading or transport of the pipes. Improper storage of pipes can lead to damage or serious injury.
- It is recommended that the pipes be stored in closed spaces, protected from direct sunlight.

Valrom Industrie SRL
J1996004810406; RO8529679
28 Preciziei Blvd., 6th District
062204 Bucharest, Romania
office@valrom.ro
www.valrom.ro

- Storage period for PEHD pipes is a maximum of two years from the date of manufacture marked on the pipe.
- Outdoor storage exposed to solar radiation for long periods of time and/or at high temperatures can cause deformations that could negatively affect the joint. To avoid this risk, the following is recommended: covering the pipes in such a way as to allow free passage of air around them.
- The storage areas must be adequate and wide enough to ensure the handling of the pipes including by mechanical means. These areas must be free of any vegetation that could catch fire and in any case specific measures must be taken to minimize the risk of fire.
- The pipes must be stored on horizontal, plane, clean surfaces (smooth, free of sharp objects, etc.) that has not to affect tube's quality. Pipes will be protected against bending or deformation. Pipes will be protected from contact with fuels, solvents, oils, greases, paints and/or heat sources.
- Near the storage area is prohibited the work with open flame, the combustible materials must be removed, smoking is prohibited.
- The storage of pipe bundles wrapped with PET tape is done one above the other by placing on the ground and between the bundles at least three wooden spacers, positioned equidistant from the middle of the bundle, of equal thickness, having a minimum length equal to the width of the bundle and a minimum thickness of 50 mm. The maximum height of the bundle stack must not exceed 1.5 m, to avoid deformation. Before extracting the pipes from the package, it is necessary to lower the package to the ground. The pipes must be secured to prevent their movement which may cause injuries and/or damage to the construction site.
- The pipe coils with nominal diameters between DN/OD 20 - 50 mm are arranged on a pallet one above the other and then the pallet is can be wrapped with stretch film. The coils are tied with plastic tape, 4 - 6 ties placed equidistantly. Pallets shall not be stacked on top of each other. In the case of pyramid storage, the maximum height of the pyramid storage of coil packages is a maximum of 3 rows for open-air storage and can be a maximum of 5 rows in covered and cool warehouses.
- Pipe coils with nominal diameter between D 63 and 125 mm are stored in vertical position in a row supported by a device and secured against movement. If they are stored in a horizontal position one on top of the other, it is recommended that the height of the stack not to exceed 1.5 m.

Important! During handling, transport and storage of HDPE pipes and fittings, all measures shall be taken in order to comply with the occupational health and safety rules.

4. Warranty, Duration of use

- The HDPE VALWater pipes PE100CERT have a warranty of 5 years, if the transport, handling, mounting and use requirements set out in "HDPE VALROM Pipes technical book" are accomplished.
- VALWater HDPE pipes have a duration of use of 50 years at a fluid temperature of 20°C and working pressure equal to, or lower than the nominal pressure for which they were

Valrom Industrie SRL
J1996004810406; RO8529679
28 Preciziei Blvd., 6th District
062204 Bucharest, Romania
office@valrom.ro
www.valrom.ro

manufactured.

- The product is approved by the Romanian Permanent Technical Council for Construction, it has Endorsement and Technical Agreement, available on the site www.valrom.ro.
- The pipes and fittings are authorized to be used in contact with drinking water, Sanitary of I.N.S.P. Approval no. 03 INSP/20.05.2025.

5. Installation

- Before installation, the pipes must be inspected for possible damage that may occur during handling and storage. Those with surface defects deeper than 10% of the nominal wall thickness will not be used.
- The installation and the verification of the works will be carried out in accordance with the project specifications.
- The design and installation regulations in force will be respected (e.g. NP133, EN805, EN1046, etc.).
- The design and installation rules in force must be obeyed.
- When performing the works, the rules of work protection in force must be obeyed.
- **Important!** During coil unwinding operations, safety measures must be taken to protect the operator against uncontrolled effects of the pipe. When unwinding pipes from the coil, considerable forces occur, which in case of inattention can cause personal injury and damage to nearby objects. We recommend using an appropriate unwinding device or safe means that support the coil and allow it to be unwound safely. When unwinding pipes, do not use equipment and accessories with cutting edges or abrasives, and avoid twisting the pipe and contact with stones or any other obstacles that lead to scratching the pipe. Do not cut the bands that hold the coil before starting to unwind the pipe.
  The bands are cut one by one, depending on how the pipe is unwound. Secure the end of the pipe to prevent rewinding, and at the end of unwinding, secure the second end as well. Measures shall be taken to prevent re-winding of the pipe (a straightening device may be used).
- Where pipes are pulled on the ground, guide rollers shall be used.
- After performing the excavations according to project specifications, the ditch bottom must be leveled with a sand layer. After the pipe is laid out, gaps left between the tube and the ditch wall shall be filled with selected soil.
- We recommend that a trench width be preserved equal to the tube diameter plus 40 cm; also, an adjoining protection area shall be preserved with at least 15 cm of sand above and below the pipe.
- Fine digging material is allowed over the upper sand layer, in compressed layers around 30 cm thick. (see figure below):

Valrom Industrie SRL
J1996004810406; RO8529679
28 Preciziei Blvd., 6th District
062204 Bucharest, Romania
office@valrom.ro
www.valrom.ro

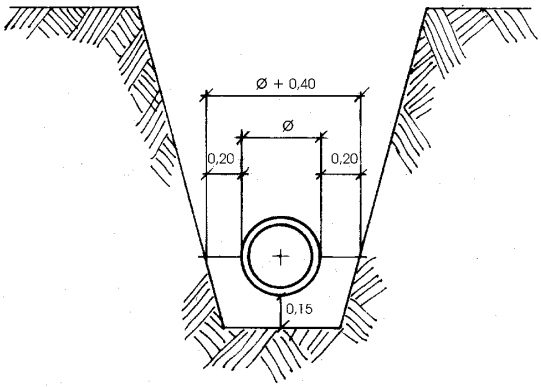

- For a subsequent ditch filling one could use the recovery material, which must be well compressed, thus excluding materials impregnated with water, peat, mud, etc. Filling must be performed in a single direction and performed during the morning as much as possible.
- We recommend that tube ends be left uncovered for a better performance of subsequent mounting operations.
- Under special circumstances, layout could be significantly improved (see figure below) by using geotextile materials in order to stabilize the pit bottom (1), walls (2), the tube protection (3); the method is also useful to anchor the pipe (preventing it from floating on underground water) (4).

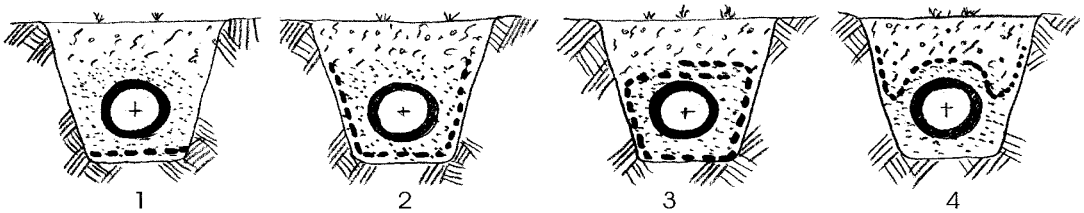

- **The pressure tightness test** is carried out with water, in accordance with:

– The execution project;
and
– The regulation on the design, execution and operation of water supply and sewage systems of localities. Indicative NP 133, current edition.
– Standard SR EN 805 Water supplies – Conditions for systems and components external to buildings, current edition.

- **Important!**

The maximum value for the test pressure of the network must not exceed the value of 1.5xPN, corresponding to any component being tested.

- **Important!**

Water loss at a butt weld joint may indicate an imminent failure. The pipe section will be depressurized immediately after water loss at the weld joint has been observed.